Emergency Light & Siren

Installation Quick Guide

1. Open the Emergency Light & Siren Box by loosening the 4 screws located at each corner.
2. Make sure that the red and black wires are connected to the battery charger in the appropriate locations: **RED +** **BLACK –**
3. Connect a wire from the **(+)** of the right terminal (*To Backup Card*) to the **COMMON** (*COM*) of the alarm card.
4. Notice that the Light and the Siren each have red and black wires of their own.
   a. Connect the **BLACK** wires to the **(–)** of the right terminal (*To Backup Card*).
   b. Connect the **RED** wires to **N.C. (Normally Closed)** of the alarm card.
5. Connect the Main Power to the BATTERY CHARGER card.

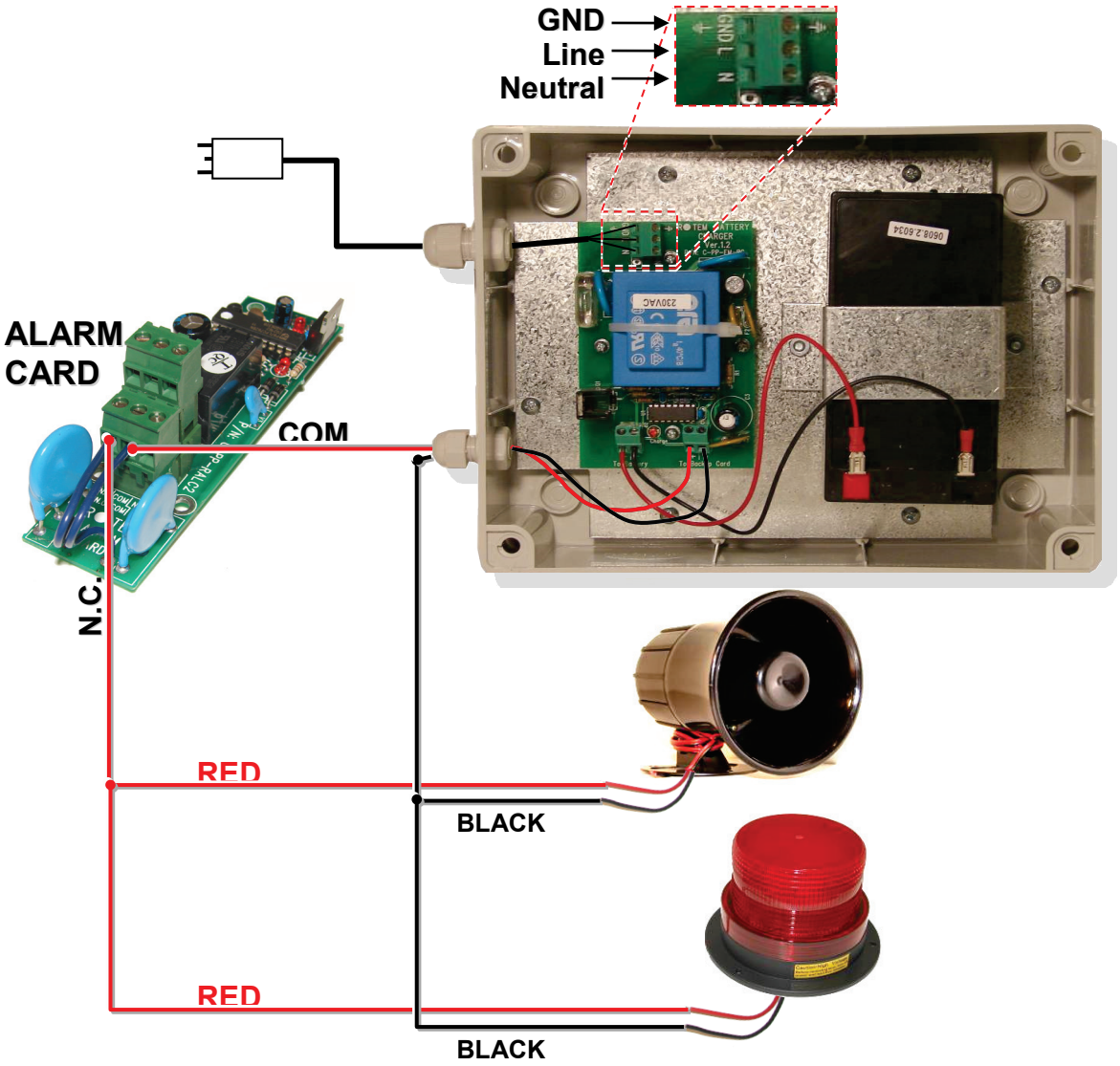

P/N: 116135